REVISION No. 9

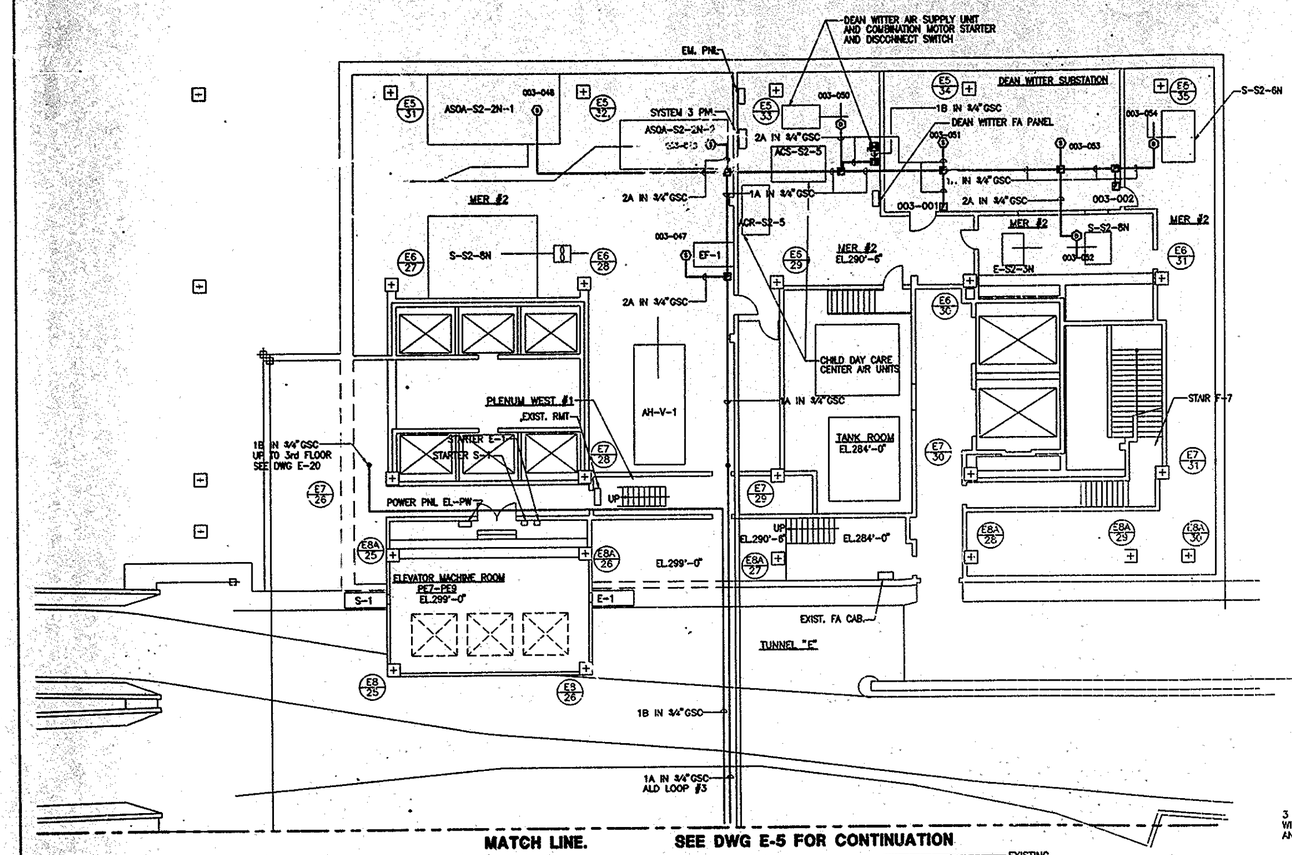

NOTES:

1. FOR LEGEND, ABBREVIATIONS & GENERAL NOTES, SEE DWG E-1.
2. FOR B1 LEVEL MER SMOKE DETECTOR RISER DIAGRAM, SEE DWG E-3.

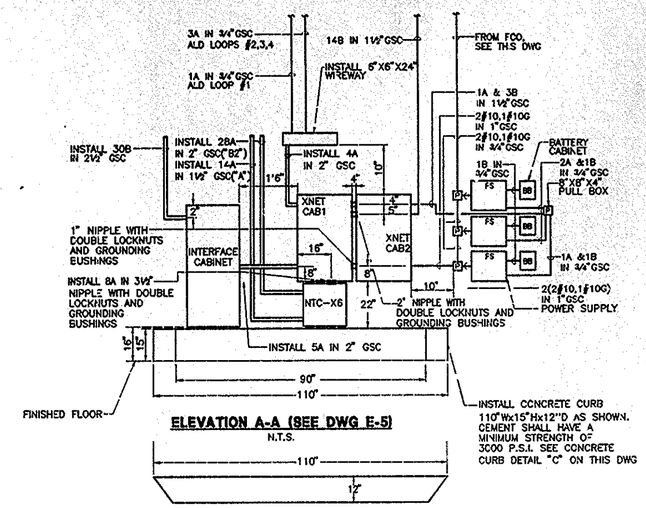

ELEVATION A-A (SEE DWG E-5)
N.T.S.

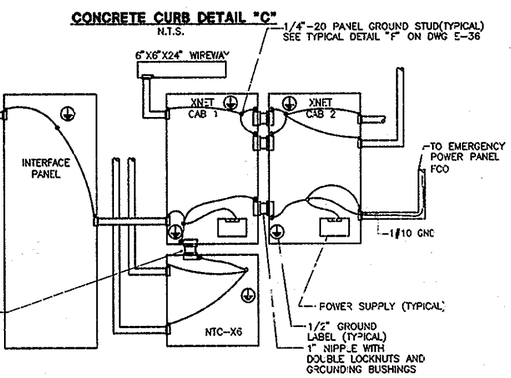

CONCRETE CURB DETAIL "C"
N.T.S.

XNET CABINET AND NTC-X6 GROUND WIRING DETAIL
N.T.S.

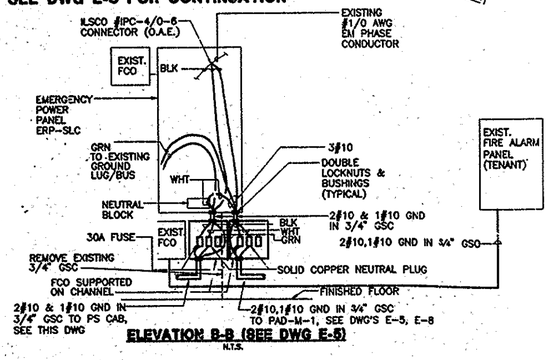

ELEVATION B-B (SEE DWG E-5)
N.T.S.

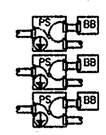

POWER SUPPLY CABINETS GROUND WIRING DETAIL
N.T.S.

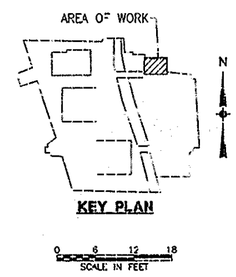

KEY PLAN

Sheet 7 of 37

THE PORT AUTHORITY OF NY & NJ

ENGINEERING PROGRAM MANAGER WORLD TRADE

CHIEF ELECTRICAL ENGINEER

I HEREBY CERTIFY THAT THIS IS A TRUE AND CORRECT COPY OF ONE OF THE CONTRACT DRAWINGS CONSTITUTING A PART OF CONTRACT NO. WTC-861.571 IN THE FORM IN WHICH SAID DRAWINGS EXISTED AT THE TIME THE SAID CONTRACT WAS EXECUTED BY THE PARTIES.

DATE 12/17/99 CONTRACT ENGR/ARCH.

DATE 12/20/99 ENGINEERING PROGRAM MGR.

No.	Date	Revision	Approved

ENGINEERING DEPARTMENT

WORLD TRADE CENTER

ELECTRICAL

Title

FIRE ALARM SYSTEM
PHASE III
5 WTC MER'S, EMR'S AND SUBSTATIONS

B1 LEVEL SUBSTATION, EMR AND A.C. PLENUM SMOKE DETECTOR PLAN

This drawing subject to conditions in Contract. All inventions, ideas, designs and methods [illegible] are reserved to Port Authority and may not be used without its written consent.

FELDSTEIN Designed by ROYZMAN Drawn by [illegible]

5-17-99 Date

WTC-861.571 Contract Number

E-6 Drawing Number

FILE NAME: Y:\WTC-861.571\5WTC\E-06.dwg plotted on 5/6/1999 by BROYZMAN